NDR-150E

ISO 9001:2015 TUV Certified Manufacturer

规格简述 Features

▲国际通用全范围交流输入
Universal AC input/ full range

▲保护种类：短路/过负载/过电压
Protections:short circuit/ over load/ over voltage

▲自然风冷
Cooling by free air convection

▲可以装在TS-35/7.5或15上
Can be installed on DIN rail:TS-35/7.5 or TS-35/15

▲100%满载老化
100% full load burn-in test

▲三年固保
3 Years warranty

型号 Model

CE SELV

型号 Model	输出电流 OUTPUT CURRENT	输出电压 OUTPUT VOLTAGE	输出功率 OUTPUT POWER	效率 EFFICIENCY
NDR-12U150E	0-12.5A	12Vdc	150W	87%
NDR-24U150E	0-6.25A	24Vdc	150W	88.5%
NDR-48U150E	0-3.13A	48Vdc	150W	90.5%

铭牌内容 Label

规格 Specification

规格/specification \ 型号/MODEL		NDR-12U150E	NDR-24U150E	NDR-48U150E
输出特性 OUTPUT	输出电压 Output Voltage	12V	24V	48V
	输出电流 Output current	0~12.5A	0~6.25A	0~3.13A
	输出功率 Output Power	150W	150W	150W
	输出电压纹波 RIPPLE & NOISE(max.)	150mV	150mV	200mV
	输出过冲 Output Overshoot(max.)	+10%		
	电压精度 Voltage Tolerance	±3%		
	线性调整率 Line Regulation	±0.5%		
	负载调整率 Load Regulation	±2%		
	待机功耗 Standby power consumption	No load power consumption≤1W:@220Vac		
	开机启动时间 Start-up Time	800mS/230Vac		
输入特性 INPUT	输入电压范围 Input Voltage Range	95~264Vac (请参考“输出负载 VS 输入电压” Please refer to “OUTPUT LOAD VS TEMPERATURE” section)		
	输入频率范围 Input Frequency Range	47~63Hz		
	输入电流 Input Current	3.2A @ 115Vac 1.6A @ 230Vac		
	转换效率 Efficiency	87%	88.5%	90.5%
	漏电流 Leakage Current	≤0.75mA / 240Vac		
	浪涌电流 Inrush Current	40A (Initial startup @220Vac, 25℃)		
温度及存储 Temperature and storage	工作温度（Ta） Working temperature	Ta=-20 ~ +60℃ (请参考“输出负载 VS 环境温度” Please refer to “OUTPUT LOAD VS TEMPERATURE” section)		
	最高壳温（Tc） Max. case temperature	Tcase=+90℃		
	工作湿度 Working humidity	20 ~ 90% RH (无冷凝 non-condensing)		
	储存温度，湿度 Storage temperature，humidity	-40 ~ +85℃ , 10 ~ 95% RH		
	温度系数 Temperature coefficient	±0.03%/℃ (0 ~ 40℃)		
保护 Protection	过载保护 Over Load Protection	110~125% 打嗝模式，故障条件移除后可自动恢复。 Hiccup mode, recovers automatically after fault condition is removed.		
	短路保护 Short Circuit Protection	打嗝模式，故障条件移除后可自动恢复。 Hiccup mode, recovers automatically after fault condition is removed.		
	过温保护 Over Temperature Protection	打嗝模式，故障条件移除后可自动恢复。 Hiccup mode, recovers automatically after fault condition is removed.		
介电强度 Dielectric strength	耐压 Withstand Voltage	I/P-O/P:1.5KVAC; I/P-FG:1.5KVAC ; O/P-FG:0.5KVAC		
	绝缘阻抗 Isolation Resistance	I/P-O/P:100M Ohm/500Vdc/25℃/70%RH		
其他 Other	产品尺寸及重量 Dimensions and Weight	净重:0.46公斤 Net Weight:0.46Kg L*W*H(mm):40*125.2*113.5		
	包装尺寸及重量 Packaging Dimensions and Weight	毛重:17.8公斤/30台/箱 Gross Weight:17.8Kg/30Pcs/ctn L*W*H(mm):415*255*280		
注释 Note	1. 如无特别声明，所有参数均在输入电压230Vac、额定负载、环境温度25℃条件下测量所得。 All parameters NOT specially mentioned are measured at 230Vac input,rated load and 25℃ of ambient temperature. 2. 纹波和噪声测量方法：使用一条12"双绞线，同时终端要并联0.1uf和47uf的电容，在20MHZ带宽下进行量测所得。 Ripple & noise are measured at 20MHz of bandwidth by using a 12" twisted pair-wire terminated with a 0.1uf & 47uf parallel capacitor. 3. 低输入电压情况下需降额输出，详情请参考“输出负载 VS 输入电压”部分。 Derating may be needed under low input voltage ,please refer to “OUTPUT LOAD VS INPUT VOLTAGE”. 4. 较高环境温度情况下需降额输出，详情请参考“输出负载 VS 环境温度”部分。 Derating may be needed at high ambient temperature ,please refer to “OUTPUT LOAD VS TEMPERATURE”. 5. 电源被视为一个元件与终端设备结合使用，因为EMC受整套装置的影响，终端设备制造商需对整套装置重新进行EMC确认。 The driver is considered as a component that will be operated in combination with final equipment. Since EMC performance will be affected by the complete installation, the final equipment manufacturers must re-qualify EMC Directive on the complete installation again.		

参考标准 Reference Standards

参考标准 REFERENCE STANDARDS	标 准 名 称 STANDARDS
UL	UL60950-1
CE	EN 60950-1
电磁兼容 EMC	EN 55022 CLASS A; GB 9254 CLASS A EN 61000-4-2,3,4,5,6,8,11,EN55024,EN61000-6-1

特性曲线 Performance Curve

输出负载 VS 输入电压
OUTPUT LOAD VS INPUT VOLTAGE

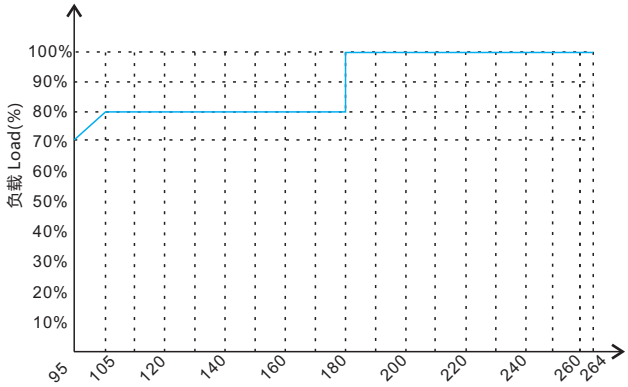

输出负载 VS 环境温度
OUTPUT LOAD VS TEMPERATURE

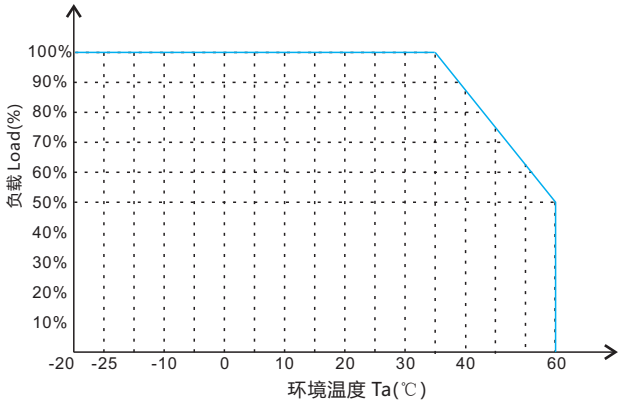

结构尺寸（单位：mm） Mechanical dimensions(Unit:mm)

Dimensions/尺寸	Length/长度	Width/宽度	Height/高度
Millimeters(Inches) 毫米(英寸)	40mm	125.2mm	113.5mm

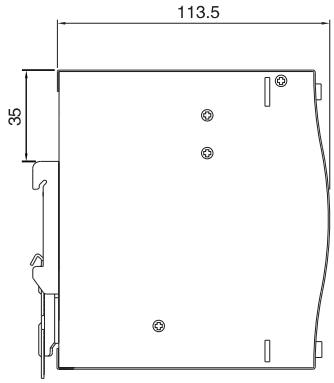

侧面图
Side View

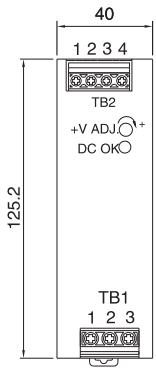

前视图
Front View

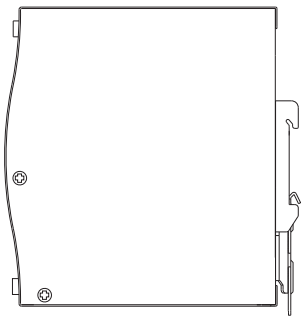

侧面图
Side View

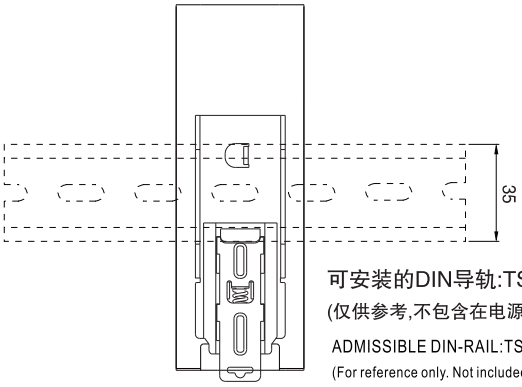

可安装的DIN导轨:TS35/7.5或TS35/15
(仅供参考,不包含在电源中)
ADMISSIBLE DIN-RAIL:TS35/7.5 OR TS35/15
(For reference only. Not included with unit.)

背面图
Back View

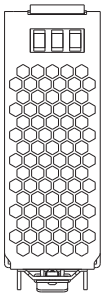

底部图
Bottom View

TB1端子脚位定义:
Terminal Pin No. Assignment (TB1)

引脚编号 Pin No.	引脚功能 Assignment
1	FG ⏚
2	AC/N or DC –
3	AC/L or DC +

TB2端子脚位定义:
Terminal Pin No. Assignment (TB2)

引脚编号 Pin No.	引脚功能 Assignment
1,2	DC OUTPUT –V
3,4	DC OUTPUT+V

◆ 安装使用说明 Installation and Operating Instructions

1. 本产品需由专业人员依照规格书要求进行安装操作。
   This device must be installed and operatde strictly in accordance with the specifications and guidelins provided in this document by qualified personnel.
2. 使用时请勿超过本产品的规格值：为保证可靠性，建议负载不超过额定值的80%。
   Do not exceed the rated specifications of this device to ensure reliability:it is recommended to operate the load at ≤80% of the rated capacity.
3. 为达到最佳的散热效果，请将本设备安装在通风良好的地方。
   Please install this device in a well-ventilated area to achieve the best heat dissipation.
4. 请勿将本设备安装在潮湿、腐蚀性气体中；远离热源、远离易燃易爆气体,以确保操作安全。
   Avoid installation in damp or corrosive environments. Maintain a safe distance from heat sources and flammable/explosive gases to ensure operational safety.
5. 通电前请使用万用表确定输入电压在规格范围内。
   Before powering on, use a multimeter to verify the input voltage is within the specified range to prevent damage.
6. 通电前请检查输入输出接线正确，极性正确,无短路接反现象，以免造成本产品或用电设备损坏。
   Before powering on ,ensure all input/output wiring is correctly terminated with proper polarity and absence of short circuits or reversed connections. Failure may cause permanent damage to the unit or connected devices.
7. 电源与LED的接线应尽可能短,过长或过细连接线会产生较大线压降,造成LED亮度不足,发光不均匀等。
   Minimize the length and maximize the cross-sectional area of cables between the power supply and LED loads. Excessively long or thin wires may cause voltage drop, leading to reduced brightness or uneven illumination.
8. 为保证使用的安全性，请确保接地端安全可靠接地（接地线建议大于AWG18#）。
   For safety compliance, the grounding terminal (PE) must be securely connected to a reliable earth ground using a wire gauge > AWG 18.